Level Detection Webcontroller V1

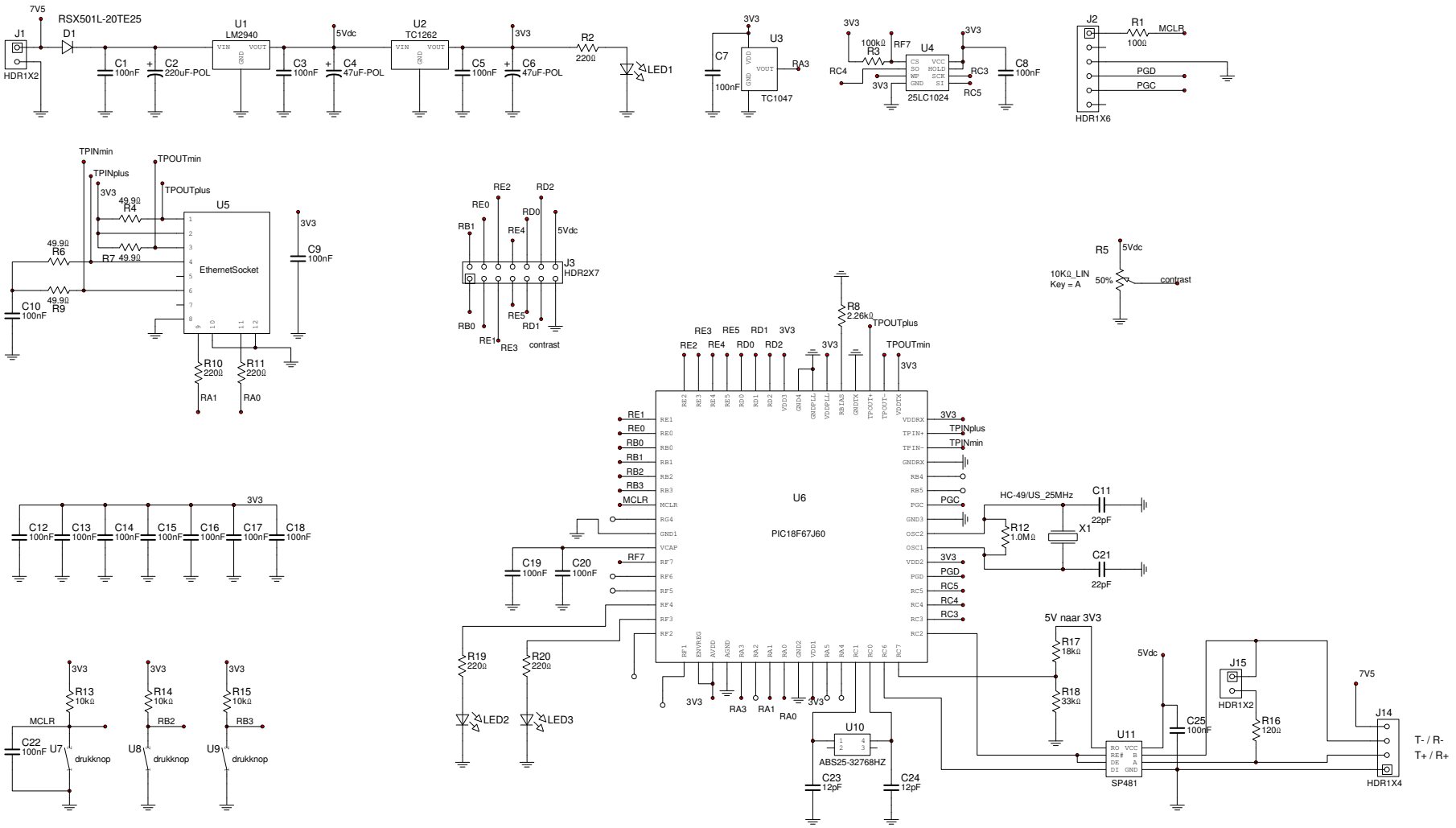

R.Buysschaert
september 2010